BY NC SA
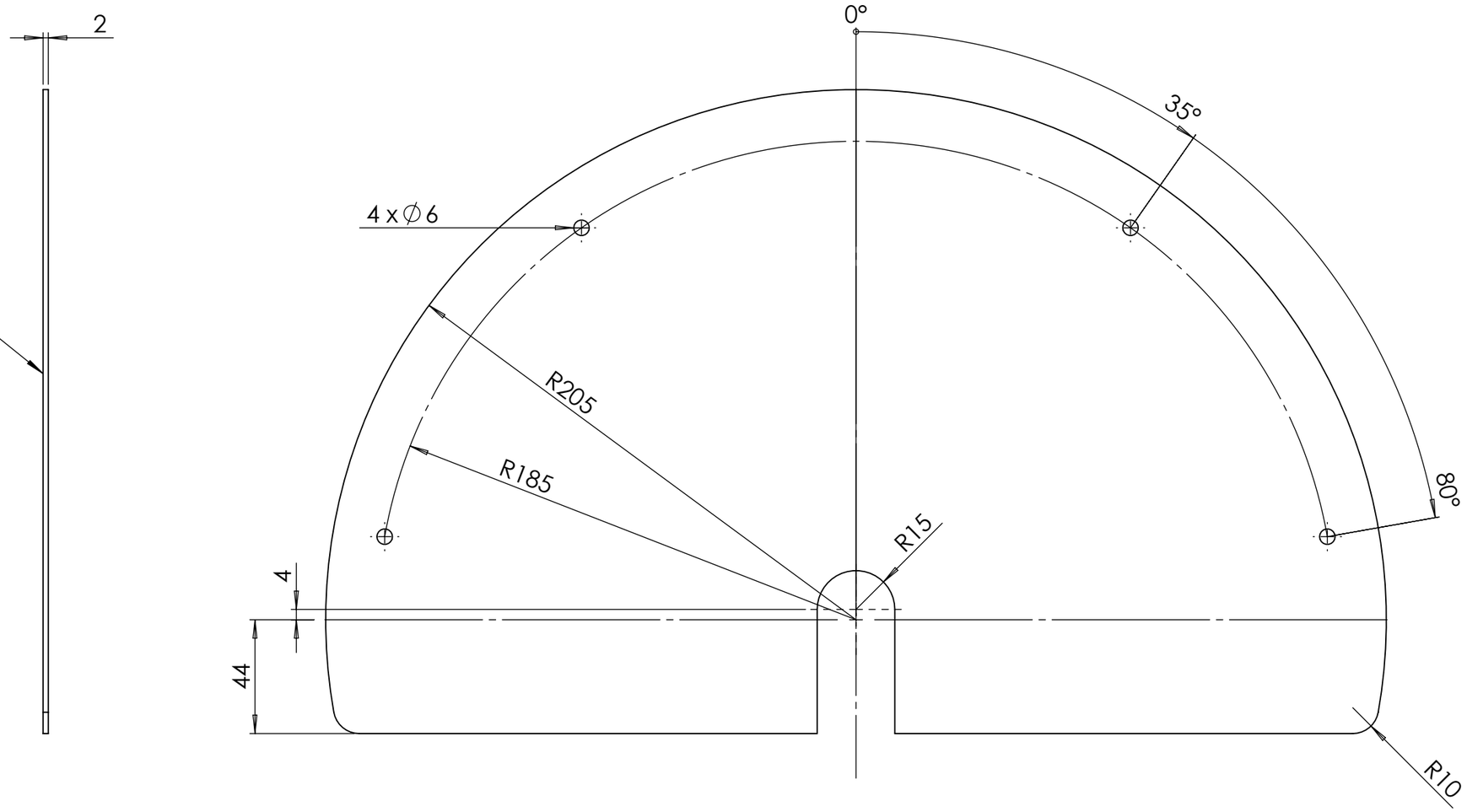
R1
Acier S235