CC BY NC SA
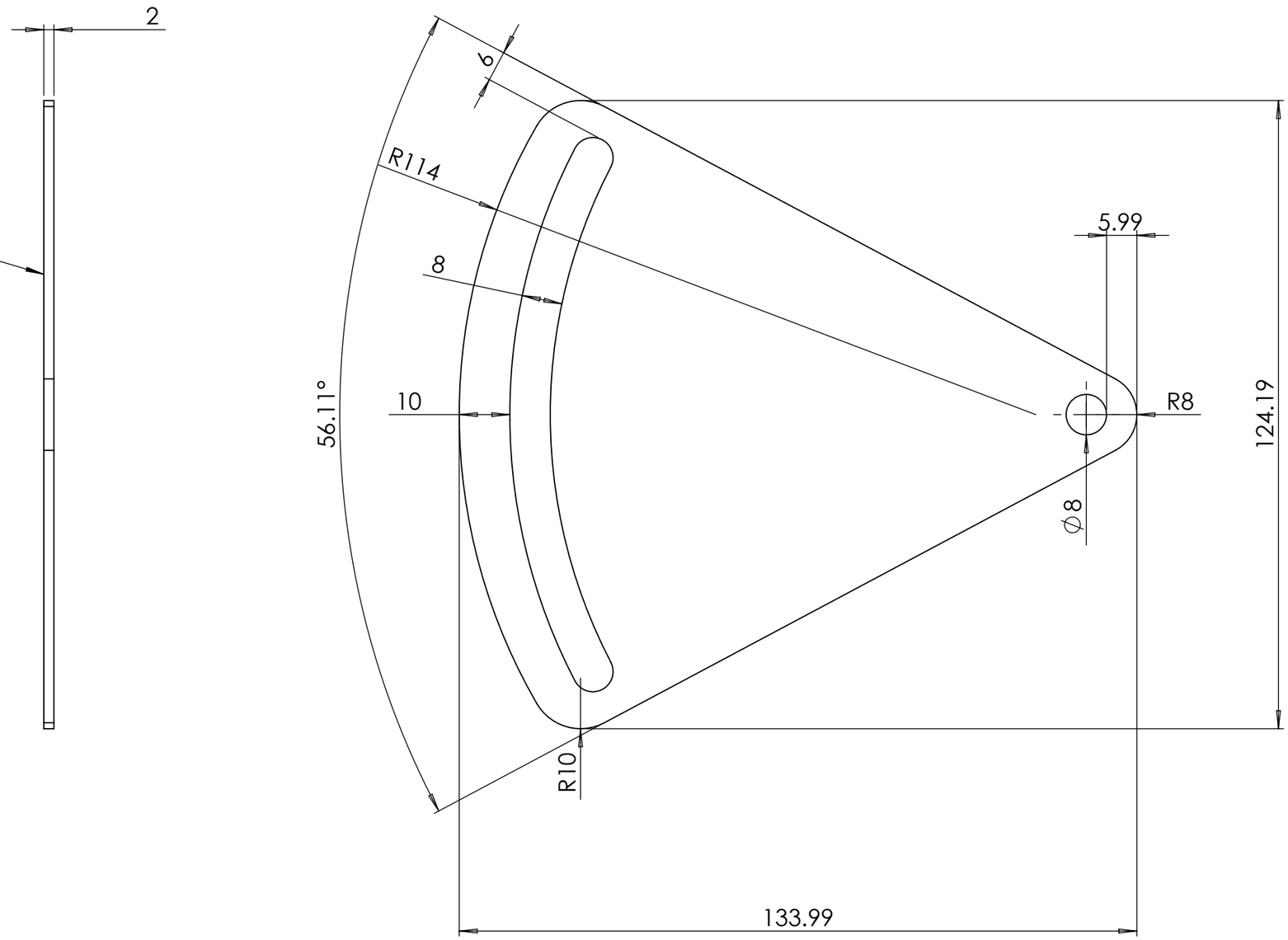
X1
Acier S235
ep. 2