Outil	Parallélogramme			
Date	10/02/2020	Version	1.1	
Feuille	PE14			

CC BY NC SA

PE14

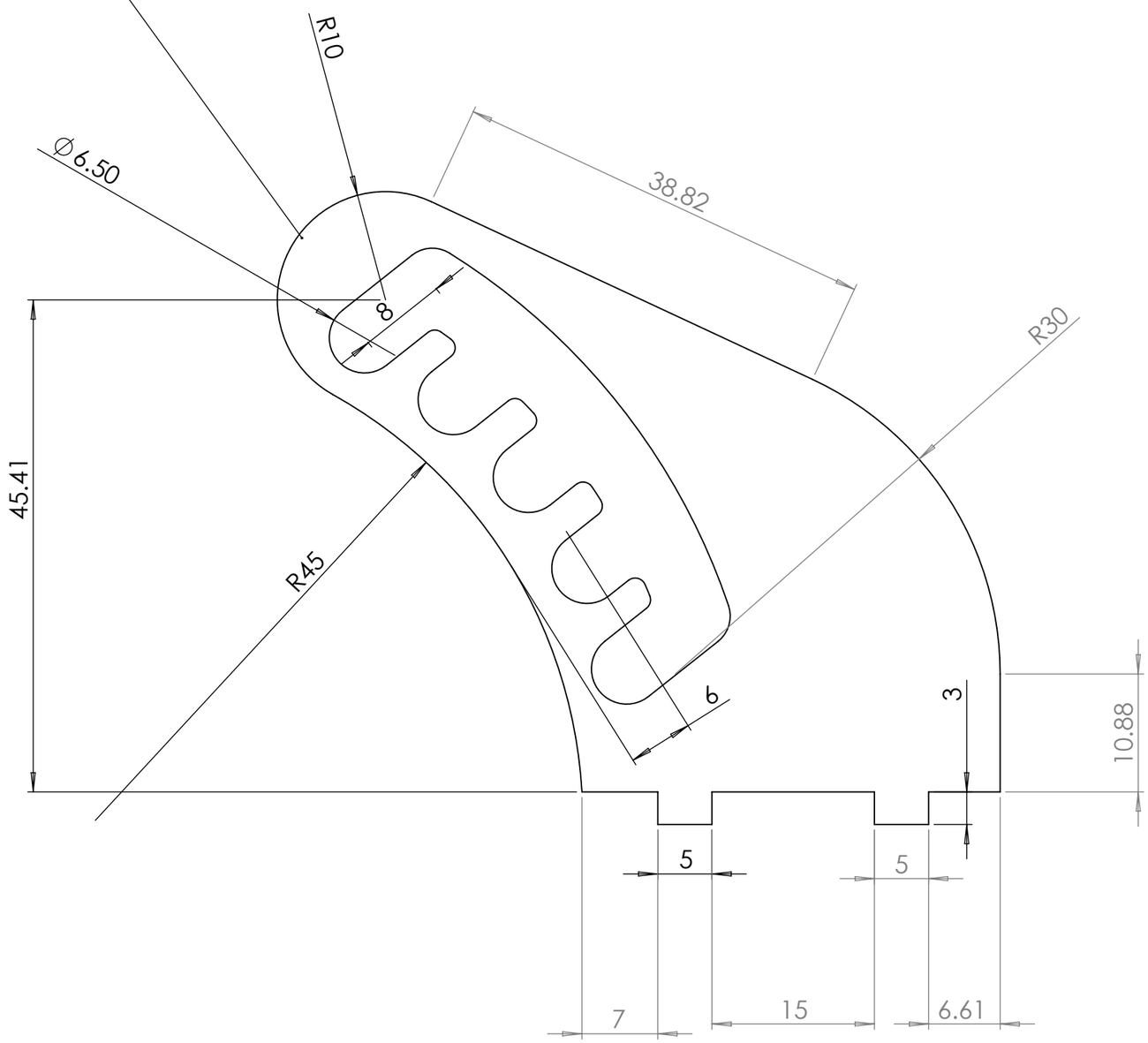

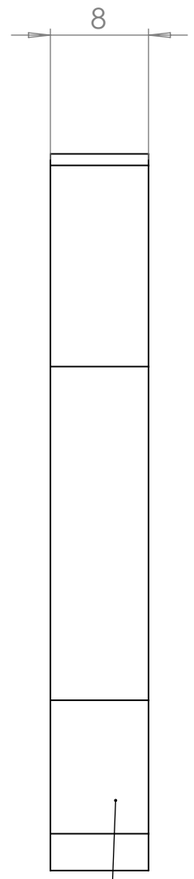

Acier S355