Outil	Parallélogramme			
Date	10/02/2020	Version	1.1	page n° 1 / 8
Feuille	PA1			
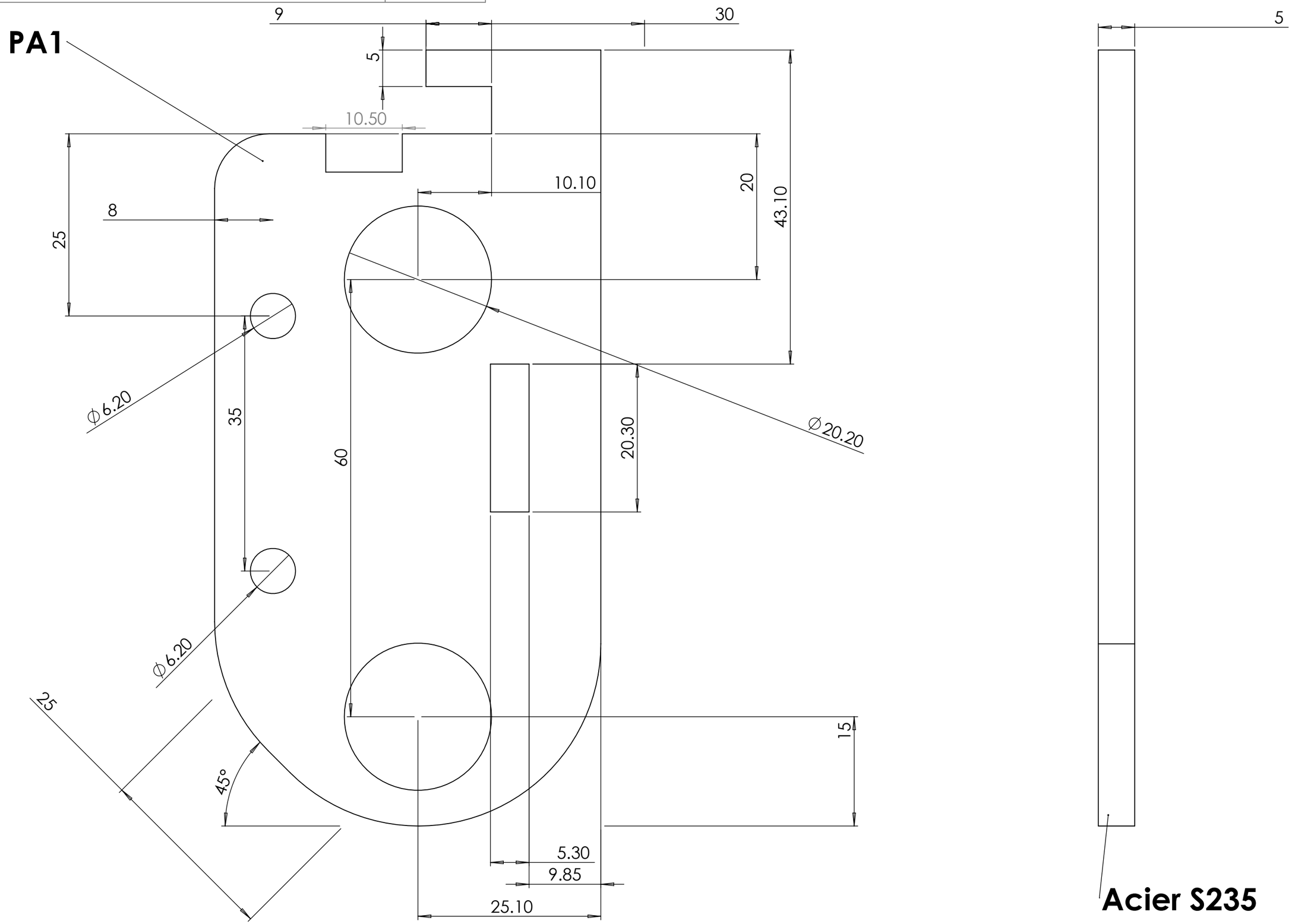
CC BY NC SA